EasyFloat®
PONTOON SYSTEMS

Art: 1100-0106
SV: Kölrulle, FZV
EN: Boat Roller, tZn

MADE IN SWEDEN

floattech
EASY AND INTELLIGENT TECHNICAL SOLUTIONS

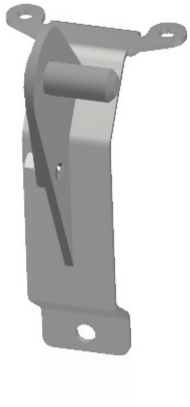

x1

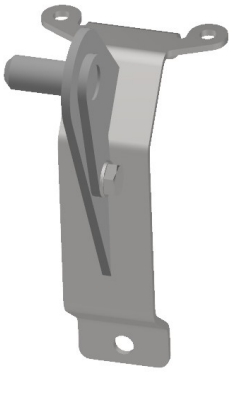

x1

x1

x4

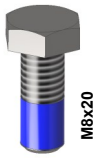

x2

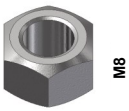

x2

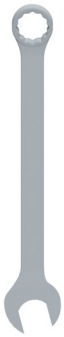

13

x2

8

Ø 8,5 mm

M8

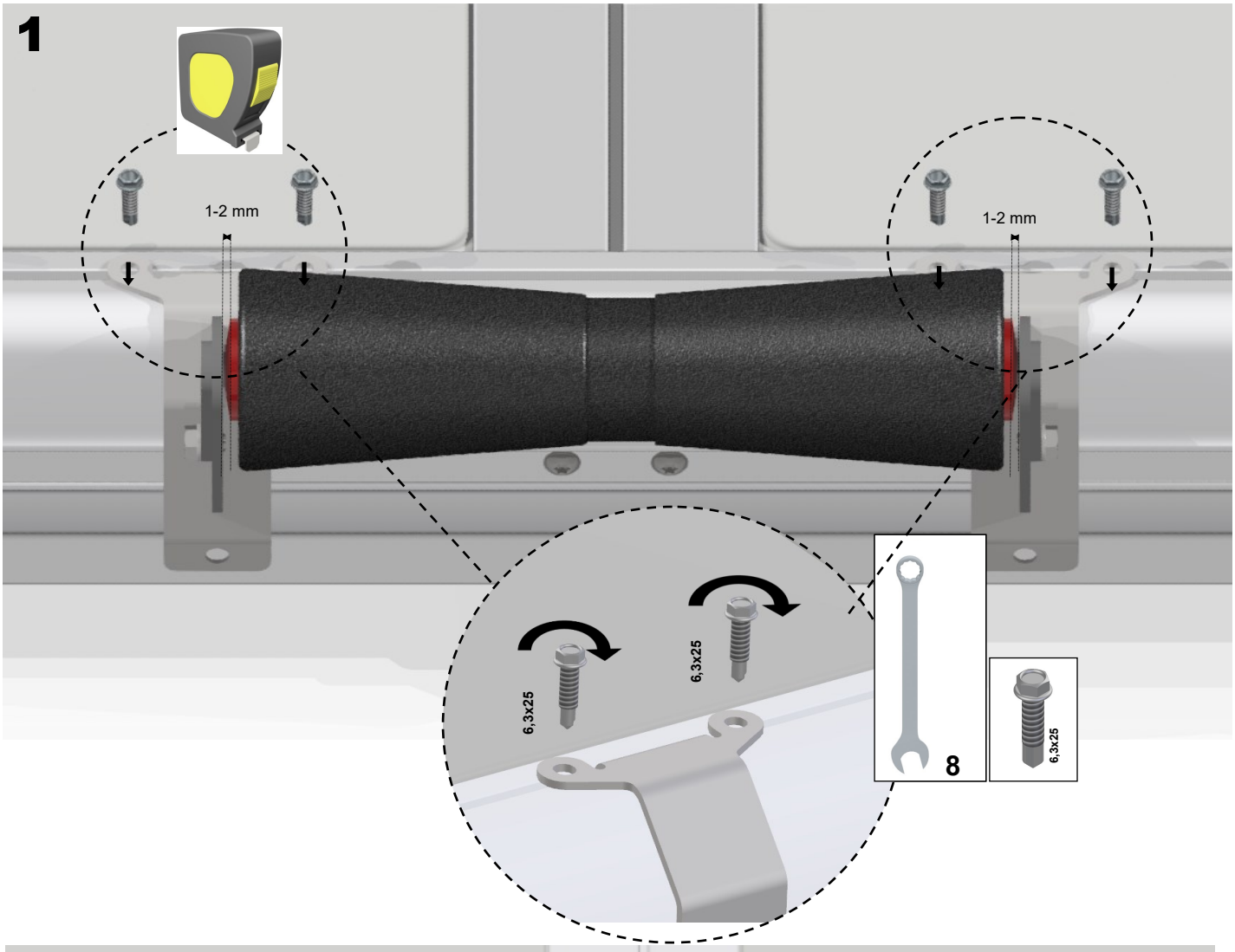
1
1-2 mm
1-2 mm
6,3x25
6,3x25
8
6,3x25

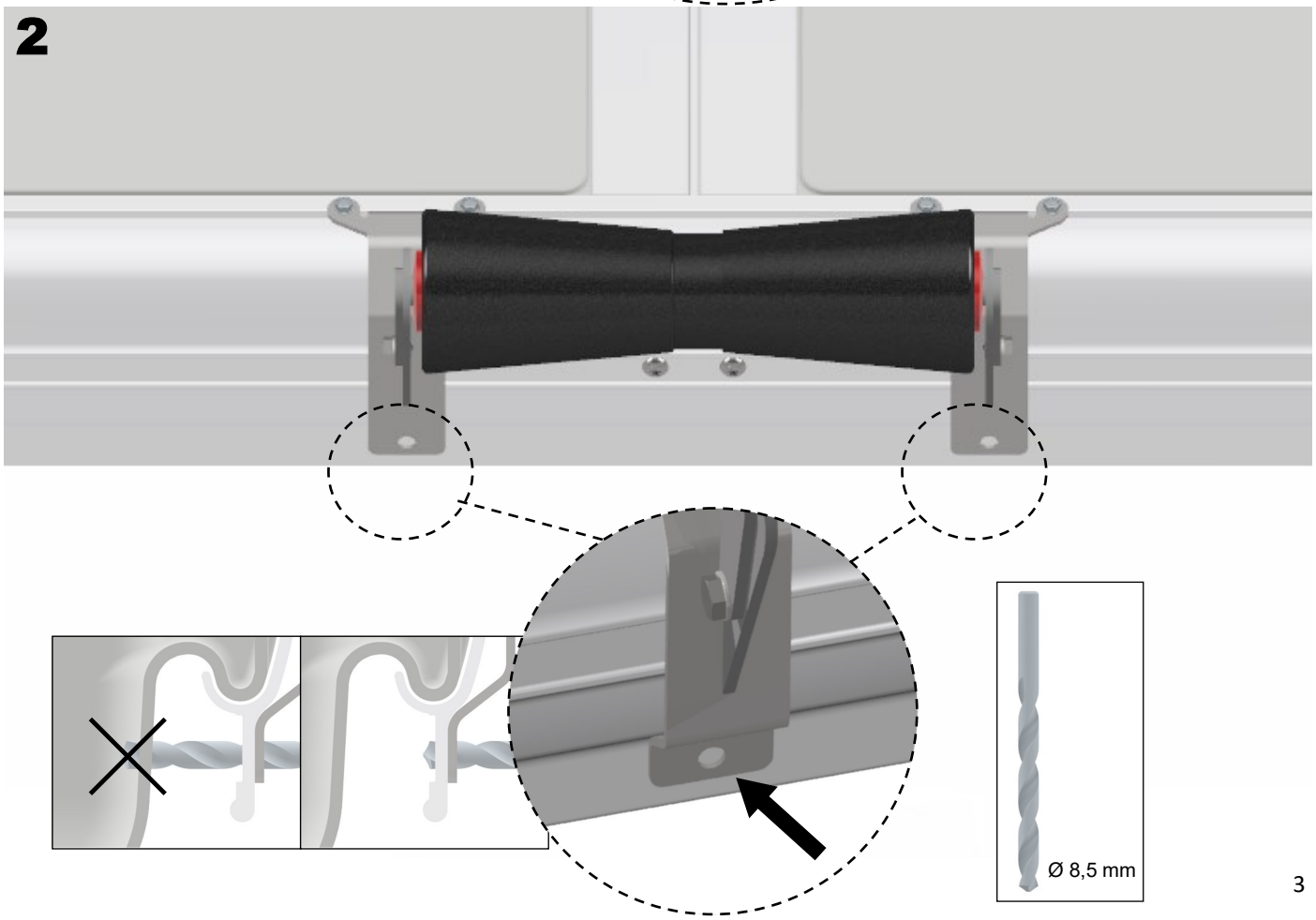
2
Ø 8,5 mm

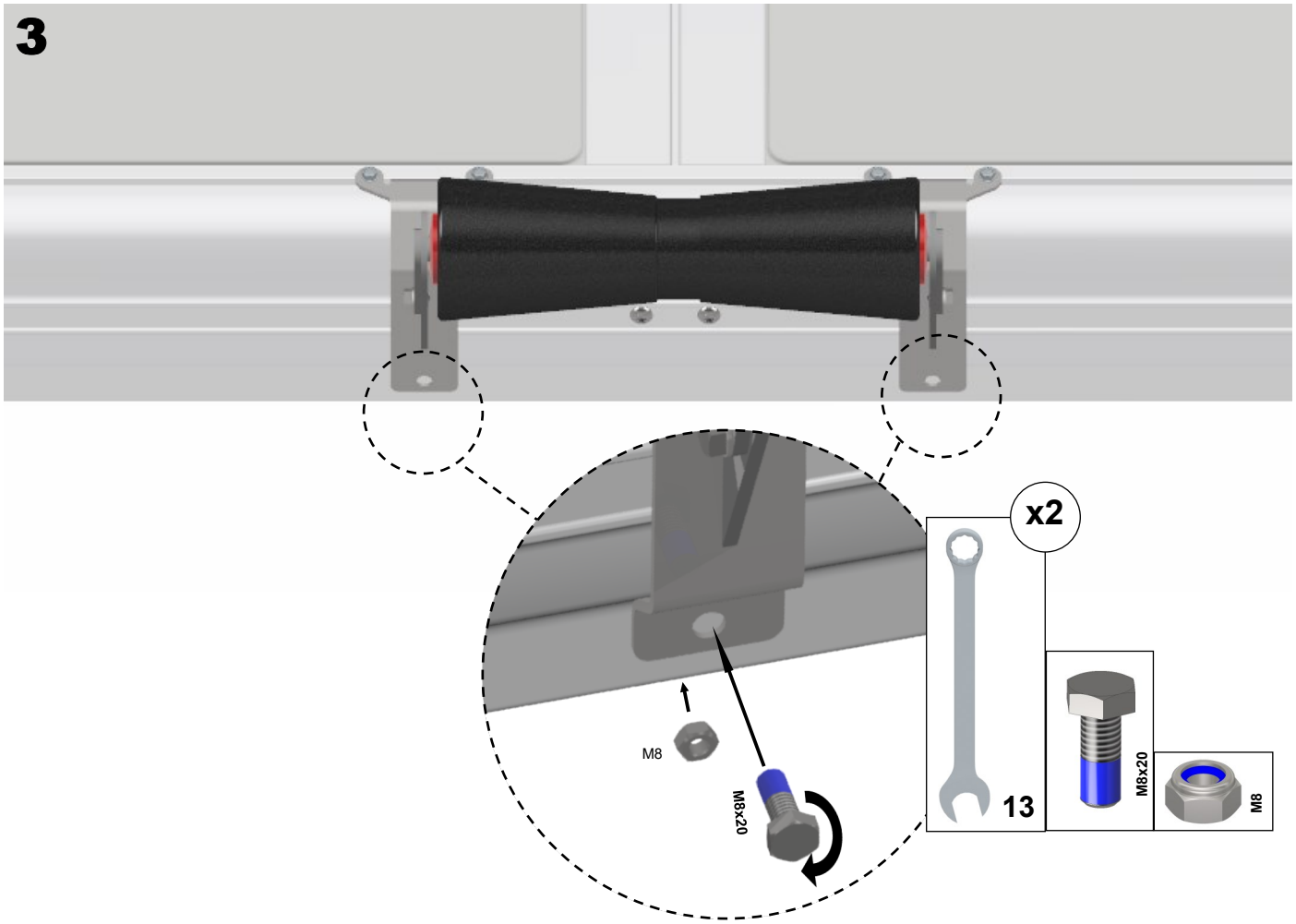
3
x2
13
M8x20
M8
M8x20
M8

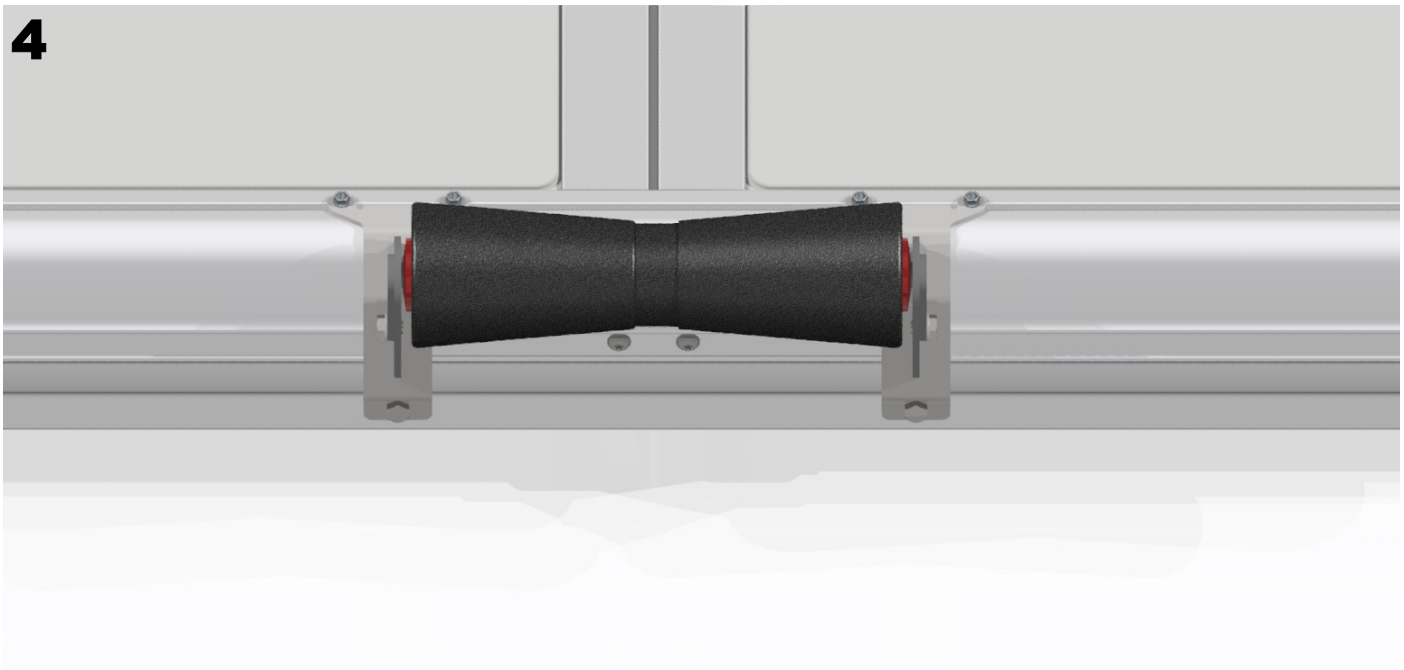
4